Installation Guide

PS•4000 FLAT WALL

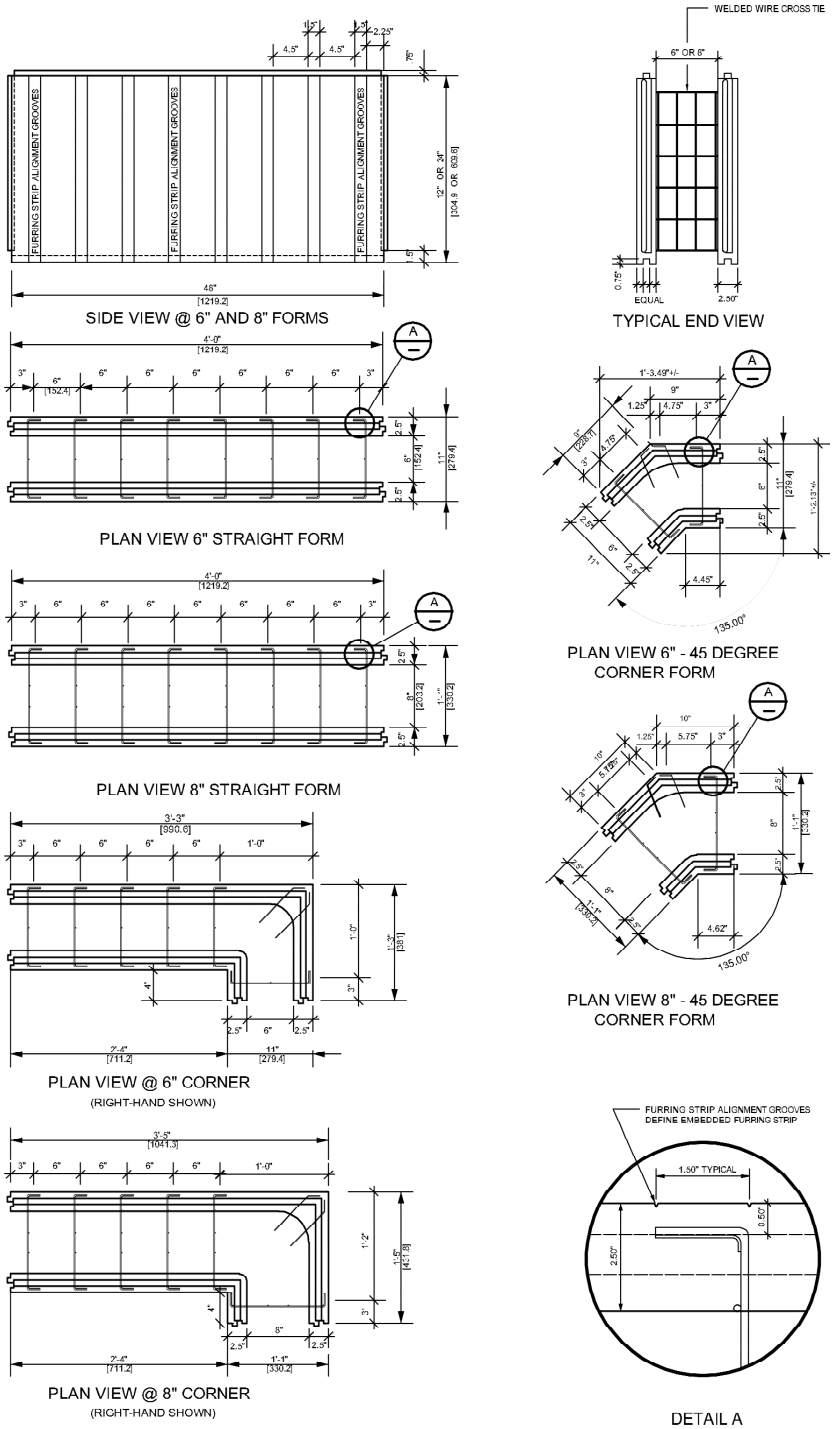

FIGURE 1

American Polysteel Flat-Wall PS-4000 Series Form